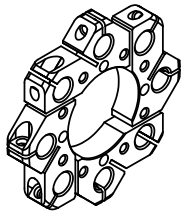

ACTUAL SIZE

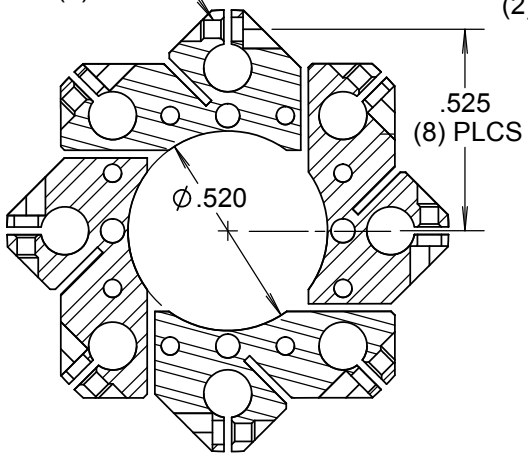

SECTION A-A

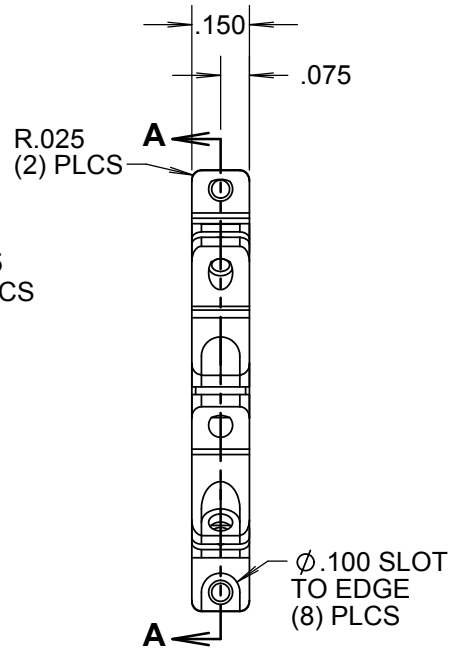

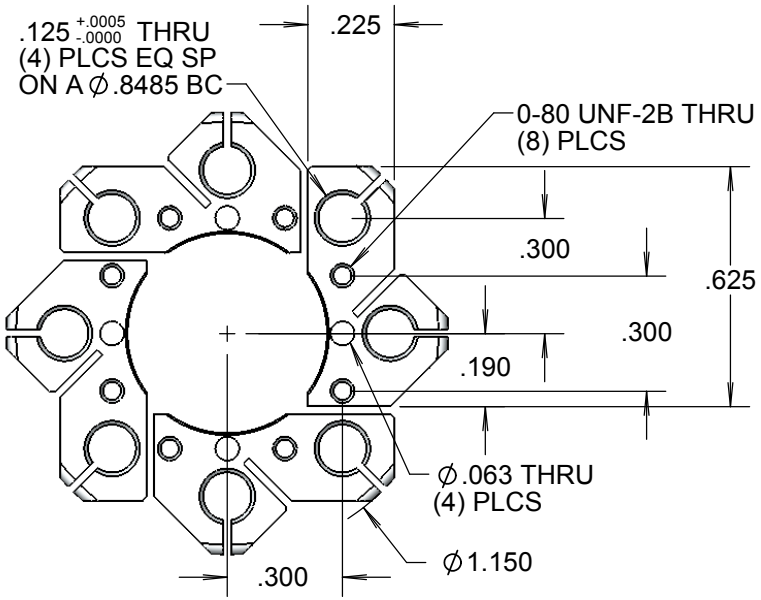

(ALL DIM'S TYP (4) PLCS, 90° APART)

REV	REVISION DESCRIPTION	DATE	BY	CHK	QT	USED ON
A	INITIAL RELEASE	11/01/05	DJO			

THIS DOCUMENTATION IS THE PROPERTY OF KIMBALL PHYSICS, INC. AND IS PROVIDED TO THE RECEIVING PARTY (AND IT'S EMPLOYEES HAVING A NEED TO KNOW) SOLELY FOR EVALUATION. IT MAY NOT BE USED BY THE RECEIVING PARTY FOR ANY OTHER PURPOSE OR DISCLOSED TO ANY THIRD PARTY WITHOUT THE WRITTEN CONSENT OF KIMBALL PHYSICS INC.

KIMBALL PHYSICS INC. KPI
KIMBALL HILL RD., WILTON, NH 03086-9742 U.S.A. (603) 878-1616

ELEMENT CLAMP (SPLIT) SS-EC-8-150-520-SP4

MATERIAL: 316 SS
SCALE: 2:1
DWG. No. **SS_EC_150_520_SP4--A**

UNLESS OTHERWISE SPECIFIED DIMENSIONS ARE IN INCHES DO NOT SCALE DRAWING
A SIZE
SHEET 1 OF 1
MODEL No. 443E503